Summary in Graph

Exam Summary (GO Classes CS Test Series 2026 | Mixed Subjects | Full Length Test 3)

Qs. Attempted:	0 (0 + 0)	Correct Marks:	0 (0 + 0)
Correct Attempts:	0 (0 + 0)	Penalty Marks:	0 (0 + 0)
Incorrect Attempts:	0 (0 + 0)	Resultant Marks:	0 (0 + 0)

Total Questions:	65 (30 + 35)
Total Marks:	100 (30 + 70)
Exam Duration:	180 Minutes
Time Taken:	0 Minutes

Individual Question Statistics

Select Metric: Marks Obtained

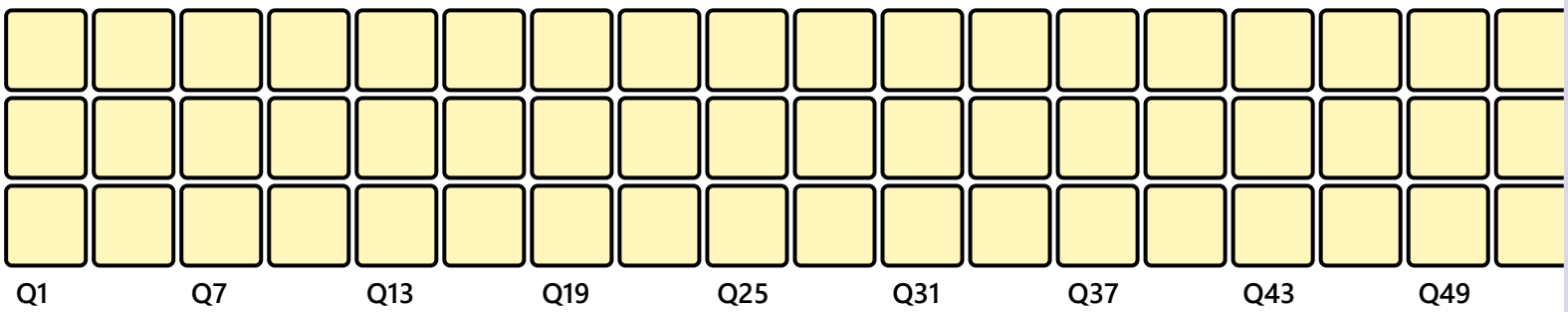

* Average Stats based on first-attempt stats of Top 10% (31) out of 309 users

EXAM RESPONSE EXAM STATS FEEDBACK

Technical

Q #1 Multiple Choice Type Award: 1 Penalty: 0.33 CO & Architecture

Which of the following is a disadvantage of a fully-associative Cache compared to a direct mapped cache?

A. Low hit rate
B. Large number of conflict misses
C. The cost to build the hardware is high

D. All of them

Your Answer: | Correct Answer: C | Not Attempted | Time taken: 00min 03sec | Discuss

Q #2 Numerical Type | Award: 1 | Penalty: 0 | Digital Logic

In a base 'b' number system $[54/4]_b = (13)_b$. The value of b is:

Your Answer: | Correct Answer: 8 | Not Attempted | Time taken: 00min 00sec | Discuss

Q #3 Multiple Choice Type | Award: 1 | Penalty: 0.33 | Digital Logic

If A, B, and C are boolean variables, which of the following is(are) true?

a. $(\mathrm{A} \wedge (\mathrm{B} \vee \mathrm{C})) = ((\mathrm{A} \wedge \mathrm{B}) \vee (\mathrm{A} \wedge \mathrm{C}))$
b. $(\mathrm{A} \vee (\mathrm{B} \wedge \mathrm{C})) = ((\mathrm{A} \vee \mathrm{B}) \wedge (\mathrm{A} \vee \mathrm{C}))$
c. $((\mathrm{A} \wedge \mathrm{B}) \vee \mathrm{C}) = (\mathrm{C} \vee (\mathrm{B} \wedge \mathrm{A}))$

A. b only
B. a, b only
C. a, c only
D. All

Your Answer: | Correct Answer: D | Not Attempted | Time taken: 00min 00sec | Discuss

Q #4 Multiple Choice Type | Award: 1 | Penalty: 0.33 | Digital Logic

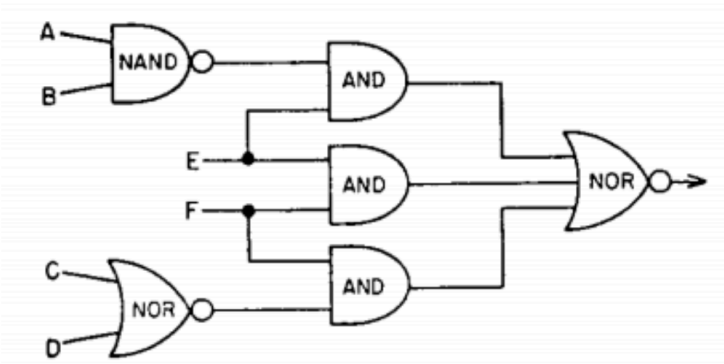

The function generated by the above network is :

A. $((\overline{\mathrm{A}} + \overline{\mathrm{B}})\mathrm{E} + \mathrm{EF} + \overline{\mathrm{C}}\,\overline{\mathrm{D}}\,\mathrm{F})$
B. $((\mathrm{A} + \mathrm{B})\overline{\mathrm{E}} + \overline{\mathrm{E}}\,\overline{\mathrm{F}} + \mathrm{C}\,\mathrm{D}\,\overline{\mathrm{F}})$
C. $((\overline{\mathrm{A}}\,\overline{\mathrm{B}} + \mathrm{E})(\overline{\mathrm{E}} + \overline{\mathrm{F}})(\mathrm{C} + \mathrm{D} + \overline{\mathrm{F}}))$
D. $((\overline{\mathrm{E}} + \mathrm{A}\,\mathrm{B}\,\overline{\mathrm{F}})(\mathrm{C} + \mathrm{D} + \overline{\mathrm{F}}))$

Your Answer: | Correct Answer: D | Not Attempted | Time taken: 00min 00sec | Discuss

Q #5 Multiple Choice Type | Award: 1 | Penalty: 0.33 | Digital Logic

A logic circuit has three input bits: a, b, and c, where ' c ' is the least significant bit and ' a ' is the most significant bit. The output from the circuit is 1 when its input is any of the 3-bit numbers $1, 4, 5$, or 6; otherwise, the output is 0. Which of the following expressions represents the output from this circuit?

A. $\overline{a}+\overline{b}+\overline{c}$
B. $\overline{a}c+a\overline{b}$
C. $\overline{b}c+a\overline{c}$
D. $\overline{a}bc+a\overline{b}$

Your Answer: | Correct Answer: C | Not Attempted | Time taken: 00min 00sec | Discuss

Q #6 | Multiple Choice Type | Award: 1 | Penalty: 0.33 | Digital Logic

AB \ CD	00	01	11	10
00	X	1		1
01				
11				
10	X	1	1	X

Which will be the equation of simplification of the given K-map?

A. $\mathrm{AB}'+\mathrm{B}'\mathrm{CD}'+\mathrm{A}'\mathrm{B}'\mathrm{C}'$
B. $\mathrm{AB}'+\mathrm{A}'\mathrm{B}'\mathrm{D}'+\mathrm{A}'\mathrm{B}'\mathrm{C}'$
C. $\mathrm{B}'\mathrm{D}'+\mathrm{AB}'+\mathrm{B}'\mathrm{C}'$
D. $\mathrm{B}'\mathrm{D}'+\mathrm{A}'\mathrm{B}'\mathrm{C}'+\mathrm{AB}'$

Your Answer: | Correct Answer: C | Not Attempted | Time taken: 00min 00sec | Discuss

Q #7 | Multiple Choice Type | Award: 1 | Penalty: 0.33 | Digital Logic

The possible number of Boolean function of 3 variables X, Y and Z such that $f(\mathrm{X},\mathrm{Y},\mathrm{Z})=f\left(\mathrm{X}',\mathrm{Y}',\mathrm{Z}'\right)$

A. 8
B. 16
C. 64
D. 32

Your Answer: | Correct Answer: B | Not Attempted | Time taken: 00min 00sec | Discuss

Q #8 | Multiple Choice Type | Award: 1 | Penalty: 0.33 | Digital Logic

Consider the following function :

$$f(x,y,z)=xy+yz+zx$$

Every variable takes input from $\{0,1\}$ randomly. What is the probability that $f(x,y,z)=1$?

A. $\frac{1}{3}$
B. $\frac{1}{4}$
C. $\frac{1}{2}$
D. $\frac{1}{8}$

Your Answer: | Correct Answer: C | Not Attempted | Time taken: 00min 00sec | Discuss

Q #9 | Multiple Choice Type | Award: 1 | Penalty: 0.33 | Digital Logic

A flip-flop can be constructed from two NAND gates connected as follows:

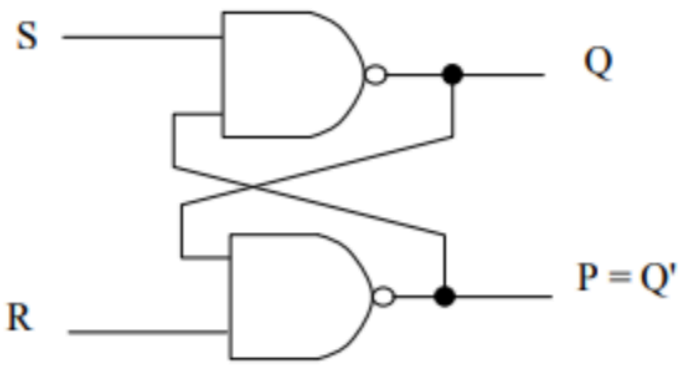

What restriction must be placed on S and R so that P always equals Q'?

A. we do not allow the $\mathrm{R} = \mathrm{S} = 0$ state
B. we do not allow the $\mathrm{R} = \mathrm{S} = 1$ state
C. we do not allow the $\mathrm{R}{=}0$, $\mathrm{S}{=}1$ state
D. P is always equal to Q' regardless of the inputs S, P.

Your Answer: | Correct Answer: A | Not Attempted | Time taken: 00min 00sec | Discuss

Q #10 | Multiple Choice Type | Award: 1 | Penalty: 0.33 | Digital Logic

Consider the JK Flip flop made using NAND gates given below

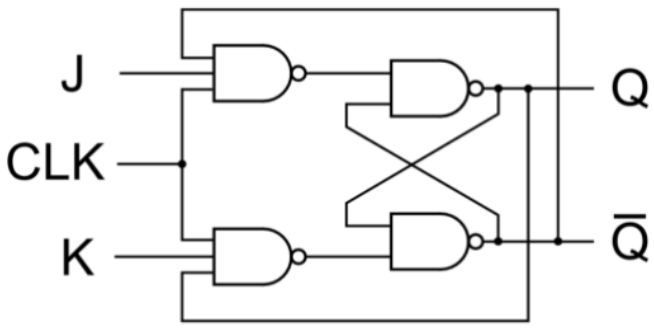

What is the characteristic equation of JK Flip flop? (Q represents the present state and Q_n represents the next state of the flip flop)

A. $\mathrm{Q}_n = \overline{\mathrm{J}}\mathrm{Q} + \mathrm{K}\mathrm{Q}$
B. $\mathrm{Q}_n = \mathrm{J}\overline{\mathrm{Q}} + \overline{\mathrm{K}}\mathrm{Q}$
C. $\mathrm{Q}_n = \mathrm{J}\mathrm{Q} + \overline{\mathrm{K}}\mathrm{Q}$
D. $\mathrm{Q}_n = \overline{\mathrm{J}}\mathrm{Q} + \mathrm{K}\overline{\mathrm{Q}}$

Your Answer: | Correct Answer: B | Not Attempted | Time taken: 00min 00sec | Discuss

Q #11 | Multiple Choice Type | Award: 1 | Penalty: 0.33 | CO & Architecture

Instead of 2 memories, one to store instructions and another one to store data, if we have only one memory then which type of hazard we could get?

A. Data hazard
B. Control hazard
C. Structural hazard

D. No hazard

Your Answer: | Correct Answer: C | Not Attempted | Time taken: 00min 00sec | Discuss

Q #12 | Multiple Choice Type | Award: 1 | Penalty: 0.33 | CO & Architecture

Consider 16-bit binary representation of decimal number $\text{“}53\text{”}$. It is stored in a system, which has byte-addressable memory where word size is 2 bytes, beginning at address 100 in big-endian fashion. What would be the content of location addressed by 101, in binary? (At bit-level we use big-endian)

A. 00110101
B. 00000000
C. 10101100
D. 01010011

Your Answer: | Correct Answer: A | Not Attempted | Time taken: 00min 00sec | Discuss

Q #13 | Multiple Choice Type | Award: 1 | Penalty: 0.33 | CO & Architecture

What is "Write-Through" with reference to a cache system?

A. Writing the data back to memory, in addition to the cache when doing a store
B. Writing the data back to cache, in addition to writing data to a register
C. Writing data to the disk after doing a write to memory
D. None of the above

Your Answer: | Correct Answer: A | Not Attempted | Time taken: 00min 00sec | Discuss

Q #14 | Multiple Choice Type | Award: 1 | Penalty: 0.33 | CO & Architecture

$\mathrm{X}(\mathrm{R}_i)$ represents an Index addressing mode.

The Effective address of operand is given by $\mathrm{EA} = \mathrm{X} + [\mathrm{R}_i]$

X denotes signed integer and mentioned in the instruction itself. If the contents of the register R_i is always equal to zero then Index addressing mode will implement

A. Immediate addressing mode
B. Absolute addressing mode
C. Indirect addressing mode
D. Register addressing mode

Your Answer: | Correct Answer: B | Not Attempted | Time taken: 00min 00sec | Discuss

Q #15 | Multiple Select Type | Award: 1 | Penalty: 0 | Operating System

Assume that you have a page reference string for a process. Let the page reference string have length p with n distinct page numbers occurring in it. Let m be the number of page frames that are allocated to the process (all the page frames are initially empty). Let $n > m$. Which of the following is correct? (Your answer is independent of the page replacement scheme that you use.)

A. p is the lower bound on the number of page faults.

B. n is the lower bound on the number of page faults.
C. p is the upper bound on the number of page faults.
D. n is the upper bound on the number of page faults.

Your Answer: | Correct Answer: B;C | Not Attempted | Time taken: 00min 00sec | Discuss

Q #16 | Multiple Select Type | Award: 1 | Penalty: 0 | Operating System

Which of the following statements is/are False?

A. Two processes reading from the same virtual address will access the same contents.
B. Two processes reading from the same physical address will access the same contents.
C. The size of a virtual page is identical to the size of a physical page.
D. The OS provides the illusion to each thread that it has its own address space.

Your Answer: | Correct Answer: A;D | Not Attempted | Time taken: 00min 00sec | Discuss

Q #17 | Multiple Select Type | Award: 1 | Penalty: 0 | Operating System

Which of the following statements is/are False?

A. Stacks are used for procedure call frames, which include local variables and parameters.
B. A SJF scheduler may preempt a previously running longer job.
C. If all jobs have identical run lengths, a RR scheduler (with a time-slice much shorter than the jobs' run lengths) provides better average turnaround time than FIFO.
D. The longer the time slice, the more a RR scheduler gives similar results to a FIFO scheduler.

Your Answer: | Correct Answer: B;C | Not Attempted | Time taken: 00min 00sec | Discuss

Q #18 | Multiple Select Type | Award: 1 | Penalty: 0 | Operating System

Which of the following statements is/are True?

A. When a user-level process wishes to call a function inside the kernel, it directly jumps to the desired function.
B. On a uniprocessor system, there is only one ready process at any point in time.
C. The convoy effect in FIFO scheduler occurs when high-priority jobs must wait for lower-priority jobs.
D. The OS provides the illusion to each process that it has its own address space.

Your Answer: | Correct Answer: D | Not Attempted | Time taken: 00min 00sec | Discuss

Q #19 | Multiple Choice Type | Award: 1 | Penalty: 0.33 | Operating System

Assume three jobs arrive at approximately the same time, but Job A arrives slightly before Job B, and Job B arrives slightly before job C. Job A requires 2 sec of CPU, Job B is 8 secs, and Job C is 7 secs. Given a FIFO scheduler, what is the turnaround time of job B?

A. 0 seconds
B. 2 seconds
C. 8 seconds
D. 10 seconds

Your Answer: | Correct Answer: D | Not Attempted | Time taken: 00min 00sec | Discuss

Q #20 | Numerical Type | Award: 1 | Penalty: 0 | Operating System

Given a disk with 200 tracks, where track requests are received in the following order $55, 58, 39, 18, 90, 160, 150, 38, 184$. The starting position for the arm is track 100. What is the number of tracks crossed when the Shortest Seek First algorithm is used?

Your Answer: | Correct Answer: 248 | Not Attempted | Time taken: 00min 00sec | Discuss

Q #21 | Multiple Choice Type | Award: 1 | Penalty: 0.33 | CO & Architecture

Which of the following addresses in decimal can not be the starting address of the word in a system with word size of 8 byte, If word alignment is implemented?

A. 1024
B. 2048
C. 1004
D. 2008

Your Answer: | Correct Answer: C | Not Attempted | Time taken: 00min 00sec | Discuss

Q #22 | Multiple Choice Type | Award: 1 | Penalty: 0.33 | CO & Architecture

A certain architecture supports indirect, direct, and register addressing modes for use in identifying operands for arithmetic instructions. Which of the following cannot be achieved with a single instruction?

A. Specifying a register number in the instruction such that the register contains the value of an operand that will be used by the operation.
B. Specifying an operand value in the instruction such that the value will be used by the operation.
C. Specifying a memory location in the instruction such that the memory location contains the value of an operand that will be used by the operation.
D. Specifying a memory location in the instruction such that the value at that location specifies yet another memory location which in turn contains the value of an operand that will be used by the instruction.

Your Answer: | Correct Answer: B | Not Attempted | Time taken: 00min 00sec | Discuss

Q #23 | Multiple Select Type | Award: 1 | Penalty: 0 | CO & Architecture

Consider the following decimal numbers. Which of the following decimal numbers Do Not have an exact representation in binary notation?

A. $\mathrm{U} = 0.1$
B. $\mathrm{V} = 0.3$
C. $\mathrm{X} = 0.4$
D. $\mathrm{Z} = 0.5$

Your Answer: | Correct Answer: A;B;C | Not Attempted | Time taken: 00min 00sec | Discuss

Q #24 | Numerical Type | Award: 1 | Penalty: 0 | CO & Architecture

What is the magnitude of the greatest magnitude negative number that can be represented in a 12-bit 2's complement code (Only write the magnitude, not the sign of it)?

Your Answer: | Correct Answer: 2048 | Not Attempted | Time taken: 00min 00sec | Discuss

Q #25 | Multiple Choice Type | Award: 1 | Penalty: 0.33 | CO & Architecture

In typical RISC ISA, delayed branch executes which instruction irrespective of whether the branch condition is true or false?

A. Instruction immediately following the branch condition
B. Instruction immediately preceding the branch condition
C. Instruction that belongs to a different a subroutine
D. It waits till the branch condition is evaluated

Your Answer: | Correct Answer: A | Not Attempted | Time taken: 00min 00sec | Discuss

Q #26 | Numerical Type | Award: 1 | Penalty: 0 | CO & Architecture

What is the minimum number of bits that are required to uniquely represent the characters of English alphabet? (Consider upper case characters alone)

Your Answer: | Correct Answer: 5 | Not Attempted | Time taken: 00min 00sec | Discuss

Q #27 | Multiple Choice Type | Award: 1 | Penalty: 0.33 | Operating System

Assume the OS schedules a workload containing three jobs with the following characteristics:

Job	Arrival Time	CPU burst
A	0	10
B	5	8
C	12	2

Which scheduler uniquely minimizes the completion time of the entire workload?

A. FIFO
B. RR
C. SRTF
D. None of the above

Your Answer: | Correct Answer: D | Not Attempted | Time taken: 00min 00sec | Discuss

Q #28 | Numerical Type | Award: 1 | Penalty: 0 | CO & Architecture

Consider two different machines. The first has a single cycle datapath (i.e., a single stage, non-pipelined machine) with a cycle time of 15 ns. The second is a pipelined machine with 5 pipeline stages and a cycle time of 3 ns. What is the speedup of the pipelined machine versus the single-cycle machine assuming there are no stalls?

Your Answer: | Correct Answer: 5 | Not Attempted | Time taken: 00min 00sec | Discuss

Q #29 Numerical Type | Award: 1 | Penalty: 0 | CO & Architecture

Consider two different machines. The first has a single cycle datapath (i.e., a single stage, non-pipelined machine) with a cycle time of 15 ns. The second is a pipelined machine with 5 pipeline stages and a cycle time of 3 ns. What is the speedup of the pipelined machine versus the single cycle machine if the pipeline stalls 1 cycle for 25% of the instructions?

Your Answer: | Correct Answer: 4 | Not Attempted | Time taken: 00min 00sec | Discuss

Q #30 Multiple Select Type | Award: 1 | Penalty: 0 | Operating System

Which of the following statements is/are True?

A. Paging approaches suffer from internal fragmentation, which decreases as the size of a page decreases.
B. TLBs are more beneficial with multi-level page tables than with linear (single-level) page tables.
C. LRU with $N+1$ pages of memory always performs strictly better than LRU with N pages of memory.
D. FIFO with $N+1$ pages of memory always performs worse than FIFO with N pages of memory.

Your Answer: | Correct Answer: A;B | Not Attempted | Time taken: 00min 00sec | Discuss

Q #31 Multiple Choice Type | Award: 2 | Penalty: 0.67 | Operating System

Consider the following variation of Peterson's algorithm:

Process P_i :

```
do {
    flag[i] = TRUE;
    turn = i;
    while (flag[j] && turn == j);
    <critical section>
    flag[i] = FLASE;
    <remainder section>
} while (TRUE);
```

Which of the following is true for this solution?

A. Mutual exclusion is satisfied but deadlock is possible.
B. Mutual exclusion is not satisfied and deadlock is possible.
C. Mutual exclusion is satisfied and deadlock is not possible.
D. Mutual exclusion is not satisfied and deadlock is not possible.

Your Answer: | Correct Answer: D | Not Attempted | Time taken: 00min 00sec | Discuss

Q #32 Numerical Type | Award: 2 | Penalty: 0 | Operating System

A system uses a simple linear page table to implement virtual memory. The virtual address space is 1 GB $(30$ bits$)$; the page size is 1 KB; each page table entry holds only a valid bit and the resulting page-frame number; the system has a maximum of 2^{15} physical pages $(32$ MB of physical memory can be addressed at most). How much memory, in MB, is used for page tables, when there are 200 processes running in the system?

Your Answer: | Correct Answer: 400 | Not Attempted | Time taken: 00min 00sec | Discuss

Q #33 Numerical Type | Award: 2 | Penalty: 0 | Operating System

Three concurrent processes $\mathrm{P1}, \mathrm{P2}$ and $\mathrm{P3}$ are concurrently updating a shared variable xyz (with initial value of 100) as follows:

- $\mathrm{P1}: \quad xyz = xyz + 10$
- $\mathrm{P2}: \quad xyz = xyz - 20;$
- $\mathrm{P3}: \quad xyz = xyz * 2$

When a process executes an instruction such as $a = b\#c$ then it read b, c from memory, performs $b\#c$ then writes the result into the memory location of "a".

What will be the maximum value of xyz after the execution of the three processes?

Your Answer: | Correct Answer: 220 | Not Attempted | Time taken: 00min 00sec | Discuss

Q #34 Numerical Type | Award: 2 | Penalty: 0 | Operating System

Three concurrent processes $\mathrm{P1}, \mathrm{P2}$ and $\mathrm{P3}$ are concurrently updating a shared variable xyz (with initial value of 100) as follows:

- $\mathrm{P1}: \quad xyz = xyz + 10$
- $\mathrm{P2}: \quad xyz = xyz - 20$
- $\mathrm{P3}: \quad xyz = xyz * 2$

When a process executes an instruction such as $a = b\#c$ then it read b, c from memory, performs $b\#c$ then writes the result into the memory location of "a".
What will be the minimum value of xyz after the execution of the three processes?

Your Answer: | Correct Answer: 80 | Not Attempted | Time taken: 00min 00sec | Discuss

Q #35 Numerical Type | Award: 2 | Penalty: 0 | Operating System

Consider the following snapshot of a system with four processes $(\mathrm{P10}, \mathrm{P11}, \mathrm{P12}, \mathrm{P13})$ and four resources $(\mathrm{R1}, \mathrm{R2}, \mathrm{R3}, \mathrm{R4})$. $\mathrm{R1}, \mathrm{R2}, \mathrm{R3}$, and $\mathrm{R4}$ have a total of $11, 6, 9$, and 4 resources, respectively. There are no current outstanding queued unsatisfied requests.

Table 1: Allocation

PID	R1	R2	R3	R4
10	1	0	2	2
11	2	1	1	1
12	1	1	3	0
13	1	0	2	0

Table 2: Max Need

PID	R1	R2	R3	R4
10	1	3	2	4
11	8	2	1	2
12	1	3	5	1
13	3	2	3	0

From the perspective of deadlock avoidance, The system is in safe state then the number of possible safe sequences is?

Your Answer: | Correct Answer: 9 | Not Attempted | Time taken: 00min 00sec | Discuss

Q #36 Multiple Choice Type | Award: 2 | Penalty: 0.67 | Digital Logic

Let $\mathrm{A}, \mathrm{B}, \mathrm{C}$ be three boolean variables. $\oplus$ and $\odot$ are exclusive-or(ExOr) and exclusive-nor(ExNor) operations respectively.
Consider the following statements:

1. $(A \oplus B) \oplus C = A \oplus (B \oplus C)$
2. $(A \odot B) \odot C = A \odot (B \odot C)$
3. $A \oplus B \oplus C = A \odot B \odot C$
4. $A \oplus B \oplus C = \overline{(A \odot B \odot C)}$

Which of the above statements is/are correct?

A. 1 and 3 only
B. 2 and 4 only
C. $1, 2$ and 3 only
D. $1, 2$ and 4 only

Your Answer: | Correct Answer: C | Not Attempted | Time taken: 00min 00sec | Discuss

Q #37 | Multiple Choice Type | Award: 2 | Penalty: 0.67 | Digital Logic

A finite state machine (FSM) has the following sequence of states at the outputs of its D-type state registers, Q_A, Q_B and Q_C :

Q_A	Q_B	Q_C
0	0	0
0	0	1
0	1	0
0	1	1
1	0	0
0	0	0
$\vdots$	$\vdots$	$\vdots$

if the state registers are initialized to state 000, or

Q_A	Q_B	Q_C
1	1	1
1	1	0
1	0	1
1	1	1
$\vdots$	$\vdots$	$\vdots$

If the state registers are initialized to state 111.

Using the principles of synchronous design, we implement a counter having the state sequence specified as above. Assume that D-type FlipFlops (D_A, D_B, D_C) are to be used and that unused states do not occur. Q_A, Q_B, Q_C are outputs of flip flops D_A, D_B, D_C, respectively. State of the counter is written as (Q_A, Q_B, Q_C)

Which of the following is a correct set of minterms for the input of the flip flops?

A. $D_A = \{3, 5, 6, 7\}, D_B = \{1, 2, 6, 7\}, D_C = \{0, 2, 5, 6\}$
B. $D_A = \{0, 2, 5, 6\}, D_B = \{1, 2, 5, 7\}, D_C = \{3, 5, 6, 7\}$
C. $D_A = \{3, 5, 6, 7\}, D_B = \{1, 2, 5, 7\}, D_C = \{0, 2, 5, 6\}$
D. $D_A = \{3, 5, 6, 7\}, D_B = \{1, 2, 5, 7\}, D_C = \{0, 3, 5, 6\}$

Your Answer: | Correct Answer: C | Not Attempted | Time taken: 00min 00sec | Discuss

Q #38 | Numerical Type | Award: 2 | Penalty: 0 | Digital Logic

We define a new class of boolean functions called "Self-Complementary Dual Functions(SCDF)". A boolean function F is said to be a Self-Complementary Dual Function(SCDF) iff $\mathrm{F}^c = \mathrm{F}^d$, where, F^c is the complement of function F, F^d is the dual of function F. Then the number of SCDF functions with 5 boolean variables is?

Your Answer: | Correct Answer: 65536 | Not Attempted | Time taken: 00min 00sec | Discuss

Q #39 | Multiple Choice Type | Award: 2 | Penalty: 0.67 | Digital Logic

Digit	A	B	C	D
0	0	0	0	0
1	0	0	0	1
2	0	0	1	0
	•	•	•	•
	•	•	•	•
9	1	0	0	1
Invalid Codes	1	0	1	0
	•	•	•	•
	1	1	1	1

The table in the figure above shows the binary-coded-decimal (BCD) representation of the digits 0 through 9. The Boolean expression that represents the set of invalid codes is

A. $(\mathrm{A} \vee \mathrm{BC})$
B. $(\mathrm{AB} \vee \mathrm{CD})$
C. $(\mathrm{AB} \vee \mathrm{AC})$
D. $(\mathrm{AB} \vee \mathrm{AD})$

Your Answer: | Correct Answer: C | Not Attempted | Time taken: 00min 00sec | Discuss

Q #40 | Multiple Choice Type | Award: 2 | Penalty: 0.67 | Digital Logic

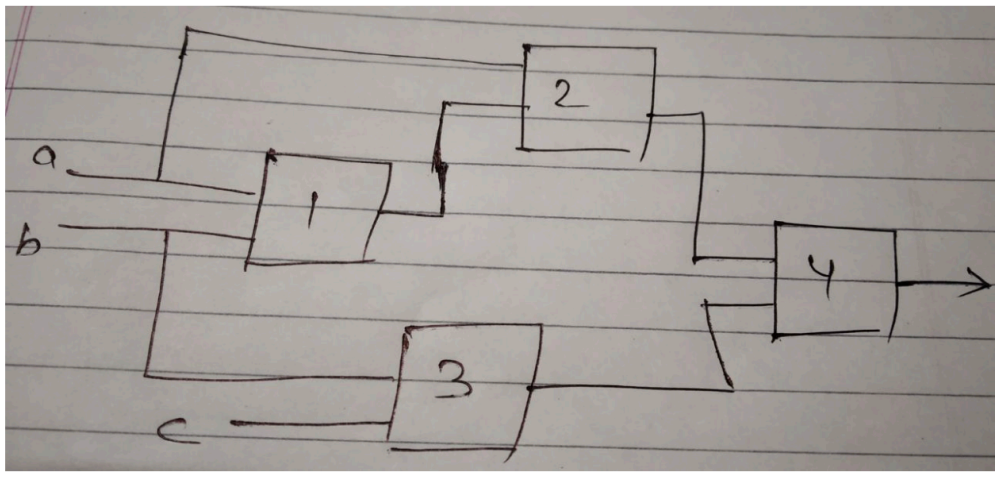

In the diagram above, the box $1, 2, 3, 4$ are some combinational logic circuits and the box labeled $1, 2$ and 3 have delays of $8, 11$ and 13 nanoseconds, respectively. Wire delays are negligible. For certain transitions of input a, b, and c, a glitch (spurious output) is generated for a short time, after which the output assumes its correct value. The duration of the glitch is

A. 6 ns
B. 8 ns
C. 13 ns
D. 32 ns

Your Answer: | Correct Answer: A | Not Attempted | Time taken: 00min 00sec | Discuss

Q #41 Multiple Choice Type | Award: 2 | Penalty: 0.67 | Digital Logic

cd \ ab	00	01	11	10
00	0: 1	4: 0	12: 0	8: 1
01	1: 1	5: 0	13: 0	9: X
11	3: 0	7: 0	15: 0	11: 0
10	2: 1	6: 0	14: 1	10: X

The karnaugh map shown above represents a switching function $\mathrm{F}(a, b, c, d)$.
How many prime implicants (PI) and essential prime implicants (EPI) are there?

A. Four (PI) and three (EPI)
B. Three (PI) and two (EPI)
C. Three (PI) and three (EPI)
D. Four (PI) and Four (EPI)

Your Answer: | Correct Answer: C | Not Attempted | Time taken: 00min 00sec | Discuss

Q #42 Multiple Choice Type | Award: 2 | Penalty: 0.67 | Digital Logic

cd \ ab	00	01	11	10
00	0: 1	4: 1	12: 0	8: 0
01	1: X	5: 0	13: X	9: 0
11	3: 1	7: 0	15: 1	11: X
10	2: 0	6: 0	14: 1	10: 0

The karnaugh map shown above represents a switching function $\mathrm{F}(a, b, c, d)$.
How many prime implicants (PI) and essential prime implicants (EPI) are there?

A. Seven (PI) and Three (EPI)
B. Six (PI) and Two (EPI)
C. Seven (PI) and Two (EPI)
D. Six (PI) and Three (EPI)

Your Answer: | Correct Answer: C | Not Attempted | Time taken: 00min 00sec | Discuss

Q #43 Multiple Choice Type | Award: 2 | Penalty: 0.67 | Digital Logic

Consider the circuit given below with initial state $\mathrm{A}_1 = 1, \mathrm{A}_2 = \mathrm{A}_0 = 0$. The state of the circuit is given by the value $4\mathrm{A}_2 + 2\mathrm{A}_1 + \mathrm{A}_0$

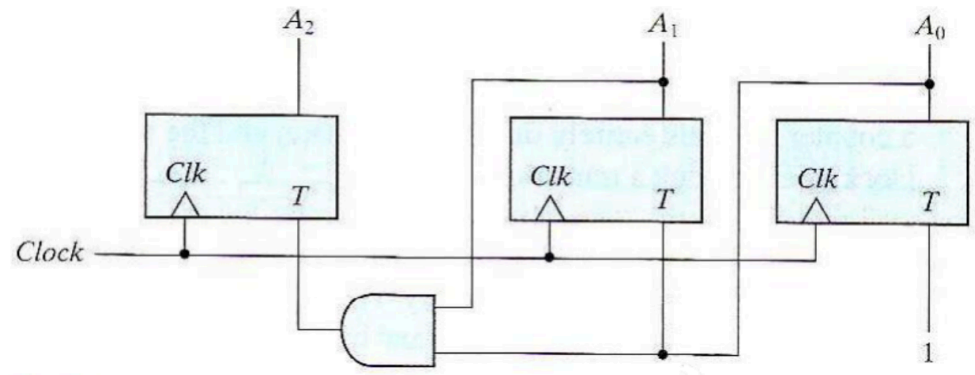

Which one of the following is the correct state sequence of the circuit?

A. $2, 1, 0, 7, 6, 5, 4, 3$
B. $2, 4, 6, 0, 2, 4, 6, 0$
C. $2, 3, 4, 5, 6, 7, 0, 1$
D. None of the above.

Your Answer: | Correct Answer: C | Not Attempted | Time taken: 00min 00sec | Discuss

Q #44

Multiple Choice Type | Award: 2 | Penalty: 0.67 | Digital Logic

The figure below shows a control circuit, consisting of 3-bit register(all the three flip flops of the register are D flip flops) and some combinational logic. This circuit is initially in the state $\mathrm{Q}_1\mathrm{Q}_2\mathrm{Q}_3 = 000$. On subsequent clock pulses, the circuit is required to generate the control sequence :

$$(100) \rightarrow (010) \rightarrow (001) \rightarrow (001) \rightarrow (001) \rightarrow \ldots$$

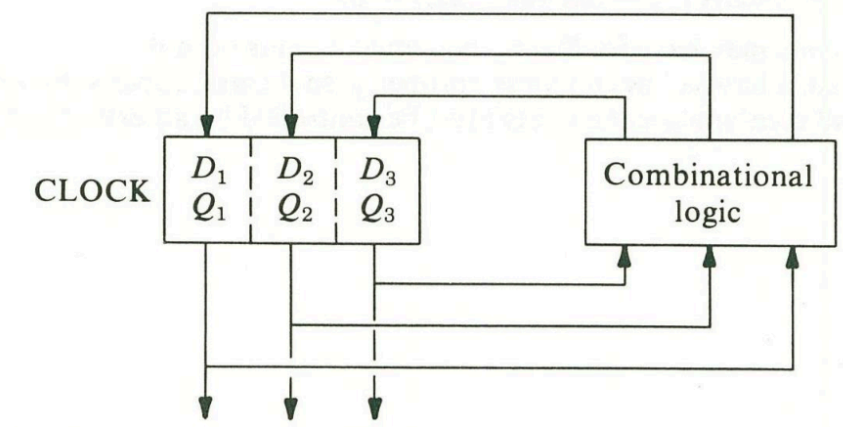

Initially =	0	0	0
Next =	1	0	0
.	0	1	0
.	0	0	1
.	.	.	.
.	.	.	.
.	.	.	.
Finally =	0	0	1

Which of the following is a correct set of equations to be implemented by the combinational logic?

A. $\mathrm{D}_1 = \overline{\mathrm{Q}_1}\,\overline{\mathrm{Q}_2}\,\overline{\mathrm{Q}_3}, \mathrm{D}_2 = \mathrm{Q}_1, \mathrm{D}_3 = \mathrm{Q}_2 \vee \mathrm{Q}_3$
B. $\mathrm{D}_1 = \overline{\mathrm{Q}_1}\,\overline{\mathrm{Q}_2}\,\overline{\mathrm{Q}_3}, \mathrm{D}_2 = \mathrm{Q}_1\overline{\mathrm{Q}_2}\,\overline{\mathrm{Q}_3}, \mathrm{D}_3 = \overline{\mathrm{Q}_1}\,\mathrm{Q}_2\,\overline{\mathrm{Q}_3}$
C. $\mathrm{D}_1 = \overline{\mathrm{Q}_1}, \mathrm{D}_2 = \overline{\mathrm{Q}_2}, \mathrm{D}_3 = \overline{\mathrm{Q}_3}$
D. $\mathrm{D}_1 = \mathrm{Q}_3, \mathrm{D}_2 = \mathrm{Q}_1, \mathrm{D}_3 = \mathrm{Q}_2$

Your Answer: | Correct Answer: A | Not Attempted | Time taken: 00min 00sec | Discuss

Q #45

Multiple Choice Type | Award: 2 | Penalty: 0.67 | Digital Logic

The figure below shows a 4-bit, right shift register, and a NOR gate. If the register outputs $\{\mathrm{ABCD}\}$ at time 0 are 0110, then their values 4 clock pulses later are :

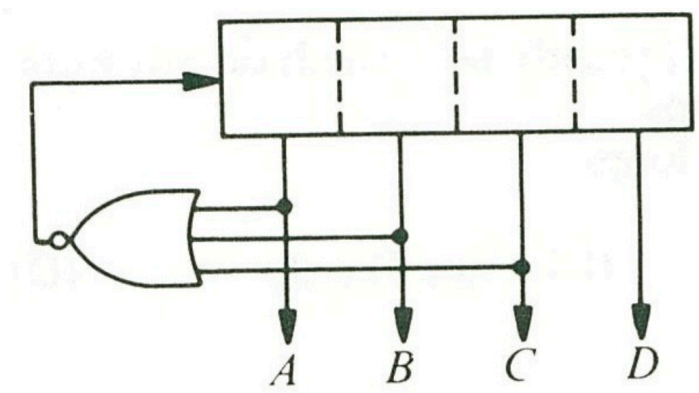

A. 0100
B. 0110
C. 0111
D. 1000

Your Answer: | Correct Answer: A | Not Attempted | Time taken: 00min 00sec | Discuss

Q #46 | Multiple Choice Type | Award: 2 | Penalty: 0.67 | Digital Logic

Analyze the following asynchronous network. Starting in the total stable state for which $\mathrm{X} = \mathrm{Z} = 0$, what will be the output sequence Z when the input sequence is $\mathrm{X} = 0, 1, 0, 1, 0, 1, \ldots$

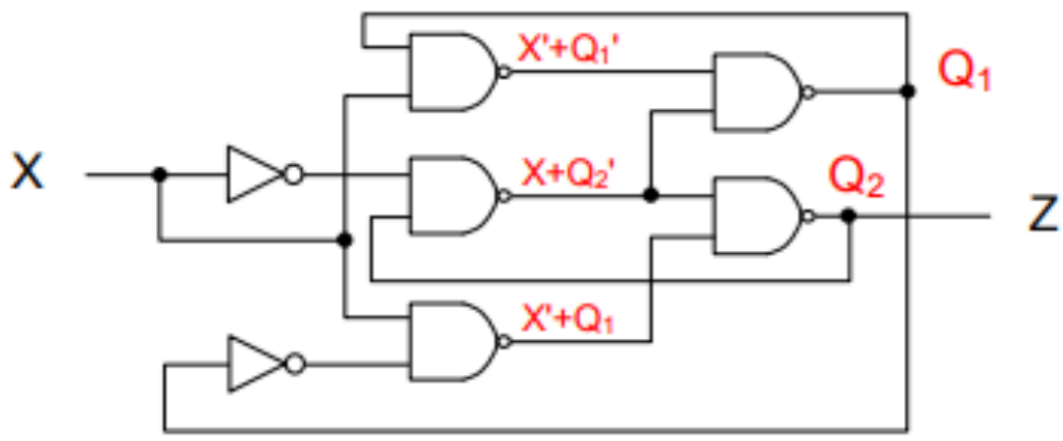

A. The output will be $\mathrm{Z} = 0\ 1\ 1\ 0\ 0\ 1\ 1\ 0\ \ldots$
B. The output will be $\mathrm{Z} = 0\ 1\ 0\ 1\ 0\ 1\ 0\ 1\ 0\ 1\ \ldots$
C. The output will be $\mathrm{Z} = 0\ 1\ 1\ 1\ 0\ 0\ 0\ 1\ 1\ 1\ \ldots$
D. The output will be $\mathrm{Z} = 0\ 1\ 0\ 0\ 1\ 0\ 0\ 1\ 0\ 0\ \ldots$

Your Answer: | Correct Answer: A | Not Attempted | Time taken: 00min 00sec | Discuss

Q #47 | Multiple Choice Type | Award: 2 | Penalty: 0.67 | CO & Architecture

In a certain pipelined processor a branch instruction can cause 2 stalls if it is not dealt properly. We can avoid this penalty if a clever compiler can fill the immediate next 2 slots with independent instructions.

Two compilers A and B generate code for this processor.

Compiler A can fill the first delay slot 35% of the time and second delay slot 85% of the time. Compiler B can fill the first delay slot 20% of the time and second delay slot 100% of the time. Assume that 30% of the instructions are branch instructions. What is the $\%$ of the improvement in CPI(Clocks Per Instruction) with compiler A over compiler B?

A. 0
B. 5
C. 10
D. 15

Your Answer: | Correct Answer: A | Not Attempted | Time taken: 00min 00sec | Discuss

Q #48 | Numerical Type | Award: 2 | Penalty: 0 | CO & Architecture

Consider a processor with a four-stage pipeline $(\mathrm{IF}, \mathrm{ID}, \mathrm{EX}, \text{and } \mathrm{WB})$.
The functionality of the stages of this pipeline is as follows :

- IF – Instruction fetch from instruction memory
- RD – Instruction decode and Register read
- EX – Execute-ALU cooperation for data $\&$ address calculation
- WB – Register write back

Consider the following sequence of instructions in which the destination register is the first (leftmost) register. All the instructions use register addressing modes for sources and destination.

```
I1 : SUB   R1,R2,R3
I2 : ADD   R4,R1,R2
I3 : DIV   R5,R1,R4
```

Each instruction in each stage takes one clock cycle. The number of clock cycles required to complete the above sequence of instructions starting from $\mathrm{I1}$, assuming data/operand forwarding is used, is _____

Your Answer: | Correct Answer: 6 | Not Attempted | Time taken: 00min 00sec | Discuss

Q #49 | Numerical Type | Award: 2 | Penalty: 0 | CO & Architecture

A pipeline of 2 stages with a delay of x units each is split to n stages. In the new design, each stage has a delay of x/n units. To get the throughput increase of 1700% what would be the n value?

Your Answer: | Correct Answer: 18 | Not Attempted | Time taken: 00min 00sec | Discuss

Q #50 | Multiple Select Type | Award: 2 | Penalty: 0 | CO & Architecture

Identify the write-read, write-write, and read-write dependencies in the instruction sequence below.

$$\begin{aligned}
&\mathrm{L1}\colon \mathrm{R1} = 100\\
&\mathrm{L2}\colon \mathrm{R1} = \mathrm{R2} + \mathrm{R4}\\
&\mathrm{L3}\colon \mathrm{R2} = \mathrm{R4} - 25\\
&\mathrm{L4}\colon \mathrm{R4} = \mathrm{R1} + \mathrm{R3}\\
&\mathrm{L5}\colon \mathrm{R1} = \mathrm{R1} + 30
\end{aligned}$$

Which of the following is true?

A. Number of write-read(WAR) dependency $= 4$
B. Number of read-write(RAW) dependency $= 4$
C. Number of write-write(WAW) dependency $= 3$
D. Number of write-read(WAR) dependency $= 3$

Your Answer: | Correct Answer: A | Not Attempted | Time taken: 00min 00sec | Discuss

Q #51 | Multiple Select Type | Award: 2 | Penalty: 0 | CO & Architecture

When performing hardware integer arithmetic, we say that overflow has occurred when the mathematically correct result of a computation cannot be represented in the number of bits available for the type being used. Obviously, it is important to be able to detect when an overflow error has occurred.

For the following options, the bit-sequences are 16-bit 2's complement representations of (signed) integer values. For which of the following, an overflow occurs when the given two integers are added?

A. $0111\ 1001\ 1011\ 1011 + 0011\ 1011\ 1110\ 1110$
B. $1111\ 0111\ 0110\ 1001 + 1000\ 0001\ 0110\ 0100$
C. $0001\ 1100\ 0110\ 1111 + 1111\ 0111\ 1110\ 1101$
D. $1100\ 1011\ 1010\ 1101 + 0111\ 1111\ 0010\ 1111$

Your Answer: | Correct Answer: A;B | Not Attempted | Time taken: 00min 00sec | Discuss

Q #52 Numerical Type | Award: 2 | Penalty: 0 | CO & Architecture

A system $\mathrm{S1}$ spends 50% of its time on graphics processing, 30% of its time on physics computations, and 20% of its time on modeling the intelligence of a game. This system is upgraded into System $\mathrm{S2}$ which processes graphics 10 times as fast as on $\mathrm{S1}$, physics processing is 6 times as fast as on $\mathrm{S1}$, an improved microarchitecture, which makes everything else twice as fast as it was on $\mathrm{S1}$. What is the overall speedup of the $\mathrm{S2}$ over the old system $\mathrm{S1}$?

Your Answer: | Correct Answer: 5 | Not Attempted | Time taken: 00min 00sec | Discuss

Q #53 Numerical Type | Award: 2 | Penalty: 0 | CO & Architecture

Assume a $1\ \mathrm{KB}$ size 4-way set-associative cache with 64 byte blocks. Assume that the cache is initially empty. Consider replacement policy: Least Recently Used (LRU). What is the miss ratio for the following memory accesses (in $\%$)? Addresses referenced
: 0xFFFFEE44, 0xA10C0450, 0xFFFFEE88, 0xC4444464, 0xA10C0440, 0x77777770, 0xFFFFEE7C, 0xBA000440, 0xFFFFEE68, 0xA10C046C

Your Answer: | Correct Answer: 60 | Not Attempted | Time taken: 00min 00sec | Discuss

Q #54 Numerical Type | Award: 2 | Penalty: 0 | CO & Architecture

Assume a $1\ \mathrm{KB}$ size 4-way set-associative cache with 64 byte blocks. Assume that the cache is initially empty. Consider replacement policy: First-In-First-Out(FIFO). What is the miss ratio for the following memory accesses (in $\%$)? Addresses referenced
: 0xFFFFEE44, 0xA10C0450, 0xFFFFEE88, 0xC4444464, 0xA10C0440, 0x77777770, 0xFFFFEE7C, 0xBA000440, 0xFFFFEE68, 0xA10C046C

Your Answer: | Correct Answer: 80 | Not Attempted | Time taken: 00min 00sec | Discuss

Q #55 Numerical Type | Award: 2 | Penalty: 0 | CO & Architecture

A cache memory system with capacity of N words and block size of B words is to be designed. If it is designed as a direct mapped cache, the length of the TAG field is 10 bits. If it is designed as a 16-way set associative cache, the length of the TAG field will be _____ bits.

Your Answer: | Correct Answer: 14 | Not Attempted | Time taken: 00min 00sec | Discuss

Q #56 | Multiple Select Type | Award: 2 | Penalty: 0 | Operating System

Consider the following solution to a problem known as the "Too much milk" problem which says that there shouldn't be more than one milk packet in the fridge. Thread A and Thread B buy the milk packet. If there is no milk packet in the fridge then either Thread A or Thread B can buy the milk and put it into the fridge.

We have a milk variable which is initialized to 0 and it indicates the number of milk packets in the fridge. For synchronization and for achieving the goal of "never making milk ≥ 2 ", we present the following solution where noteA and noteB are two shared variables for the purpose of synchronization.

Note that the buyMilk function will increment the milk variable.

Thread A

```
noteA = 1;
if (noteB == 0) {
    if (milk == 0) {
        buymilk();
    }
}
noteA = 0;
```

Thread B

```
noteB = 1;
if (noteA == 0) {
    if (milk == 0) {
        buymilk ();
    }
}
noteB = 0;
```

Which of the following is true for the above attempt/solution to solve the Too much milk problem?

A. This approach suffers from starvation.
B. This approach suffers from deadlock.
C. The goal is Not achieved by this approach i.e. milk variable can have value more than 1.
D. The progress is Not satisfied.

Your Answer: | Correct Answer: A;D | Not Attempted | Time taken: 00min 00sec | Discuss

Q #57 | Numerical Type | Award: 2 | Penalty: 0 | Operating System

Here is a table of processes and their associated arrival and running times.

Process ID	Arrival Time	CPU Running Time
Process 1	0	5
Process 2	4	5
Process 3	2	1
Process 4	7	2
Process 5	8	3

We run these processes under 2 scheduling policies: First Come First Serve (FCFS), Round-Robin (RR) with time slice quantum $= 1$. Assume that context switch overhead is 0 and that new RR processes are added to the head of the queue and new FCFS processes are added to the tail of the queue. Let the average queue wait time for all the processes in case of FCFS, RR scheduling be f, r. Note that the wait time of a process is the total time spent waiting in the queue (all the time in which the task is not running). What is $r - f$?

Your Answer: | Correct Answer: 1 | Not Attempted | Time taken: 00min 00sec | Discuss

Q #58 Numerical Type | Award: 2 | Penalty: 0 | Operating System

Here is a table of processes and their associated arrival and running times.

Process ID	Arrival Time	CPU Running Time
Process 1	0	5
Process 2	4	5
Process 3	2	1
Process 4	7	2
Process 5	8	3

Assume that we have an oracle perform the best possible scheduling to reduce(minimize) the average wait time. What would be the optimal average wait time?

Your Answer: | Correct Answer: 1.8 | Not Attempted | Time taken: 00min 00sec | Discuss

Q #59 Multiple Select Type | Award: 2 | Penalty: 0 | Operating System

Which of the following statements is/are True?

A. Given a constant number of bits in a virtual address, the size of a linear page table decreases with larger pages.
B. If a physical address is 32 bits and each page is 4 KB, the top(leftmost) 18 bits exactly designate the physical page number.
C. A multi-level page table typically reduces the amount of memory needed to store page tables, compared to a linear page table.
D. A multi-level page table needs more memory to store page tables across all levels compared to a linear page table if the process uses the entire virtual memory space.

Your Answer: | Correct Answer: A;C;D | Not Attempted | Time taken: 00min 00sec | Discuss

Q #60 Multiple Choice Type | Award: 2 | Penalty: 0.67 | Operating System

Assume the following code is compiled and run on a modern Linux machine:

```
main() {
    int a = 0;
    int rc = fork();
    a++;
    if (rc == 0) {
        rc = fork();
        a++;
    }   else {
            a++;
        }
    printf("Hello!\n");
    printf("a is %d\n", a);
}
```

Assuming fork() never fails, how many times will the message "Hello!\n" be displayed?

A. 2
B. 3
C. 4
D. None of the above

Your Answer: | Correct Answer: B | Not Attempted | Time taken: 00min 00sec | Discuss

Q #61 | Multiple Choice Type | Award: 2 | Penalty: 0.67 | Operating System

Assume the following code is compiled and run on a modern Linux machine

```
main() {
    int a = 0;
    int rc = fork();
    a++;
    if (rc == 0) {
        rc = fork();
        a++;
    }   else {
            a++;
        }
    printf("Hello!\n");
    printf("a is %d\n", a);
}
```

What will be the largest value of "a" displayed by the program?

A. 2
B. 3
C. 5
D. None of the above

Your Answer: | Correct Answer: A | Not Attempted | Time taken: 00min 00sec | Discuss

Q #62 | Numerical Type | Award: 2 | Penalty: 0 | Operating System

Assume the OS is performing page replacement on only 4 pages of physical memory. Assume the following access stream of virtual pages:

$$8, 7, 4, 2, 5, 4, 7, 3, 4, 5, 9, 5, 2, 7, 6, 2, 9, 9$$

If the OS uses the OPT(Optimal) replacement policy, how many misses will it incur?

Your Answer: | Correct Answer: 9 | Not Attempted | Time taken: 00min 00sec | Discuss

Q #63 | Numerical Type | Award: 2 | Penalty: 0 | CO & Architecture

A processor has 64 registers and uses $16-$ bit instruction format. It has two types of instructions: I-type and R-type. Each I-type instruction contains an opcode, a register name, and a 4-bit immediate value. Each R-type instruction contains an opcode and two register names. If there are 14 distinct I-type opcodes, then the maximum number of distinct R-type opcodes is _____.

Your Answer: | Correct Answer: 12 | Not Attempted | Time taken: 00min 00sec | Discuss

Q #64 | Multiple Choice Type | Award: 2 | Penalty: 0.67 | CO & Architecture

Consider three different machines. The first has a single cycle datapath (i.e., a single stage, non-pipelined machine) with a cycle time of 15 ns. The second is a pipelined machine with 5 pipeline stages and a cycle time of 3 ns. The third is a 4 stage pipeline machine with a cycle time of 3.1 ns. Assuming no stalls, let $\mathrm{S1}$ be

the speedup of the 5-stage pipelined machine versus the single-cycle machine and let $\mathrm{S2}$ be the speedup of the 4-stage pipelined machine versus the single-cycle machine. Assuming no stalls, Which of the following statements is correct?

A. 4 stage pipelined machine implementation is faster than the 5 stage pipeline.
B. $\mathrm{S1} = \mathrm{S2}$
C. $\mathrm{S1} > \mathrm{S2}$
D. $\mathrm{S1} < \mathrm{S2}$

Your Answer: | Correct Answer: C | Not Attempted | Time taken: 00min 00sec | Discuss

Q #65 | Multiple Select Type | Award: 2 | Penalty: 0 | CO & Architecture

Consider the following loop.

```
loop:
1. ADDI R2, R2, #1          // R2 ← R2 + 1
2. LD R4, 0(R3)            // R4 ← M[0+R3]
3. LD R5, 4(R3)             // R5 ← M[4+R3]
4. ADD R6, R4, R5        // R6 ← R4 + R5
5. MUL R4, R6, R7         // R4 ← R6 * R7
6. SUBI R3, R3, #8   //    R3 ← R3 - 8
7. BNEZ R2, loop     // Jump to "loop" if R2 is Not Zero.
8. ADD R11, R12, R13   // R11 ← R12 + R13
```

Identify all data dependencies (potential data hazards) in the given code snippet. Assume the loop takes exactly one iteration to complete. Specify if the data dependence is RAW, WAW or WAR.

A. Number of RAW dependencies $= 4$
B. Number of WAR dependencies $= 3$
C. Number of WAW dependencies $= 2$
D. Number of RAR dependencies $= 4$

Your Answer: | Correct Answer: A;B | Not Attempted | Time taken: 00min 00sec | Discuss

Copyright & Stuff